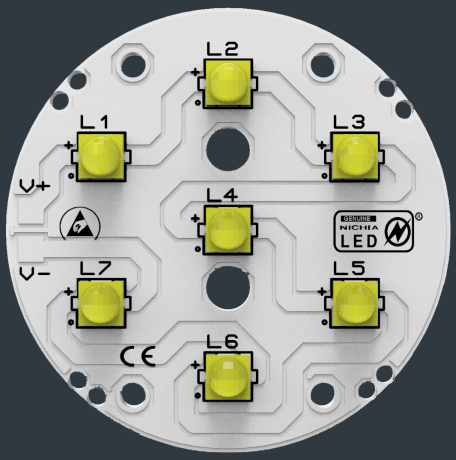

TD Lighting Solutions

X-MR0035NCxx-NVSW319B-7

Round Series

www.**tlsteknoloji**.com

PRODUCT PHOTO

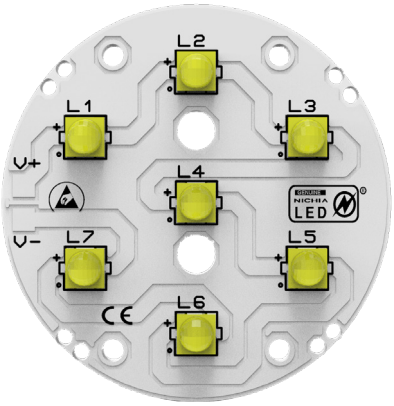

SPECIFICATIONS

- Default driving method is constant current input
- CCT Range from 2700K up to 6500K
- This module can be used as 7 series.
- Luminous flux range from 1094 lm to 4138 lm
- Efficacy of the module up to 180 lm/W
- CRI 80 is standard.CRI 70 and CRI 90 is available.
- Outstanding system color tolerance MacAdam 3 over the full operating area
- Simple installation (e.g. screw)
- Long life-time > 60,000 hours
- 5 years guarantee at specified conditions

For your orders please call us:
+90 444 27 33

APPLICATIONS

Flood Lighting

PHOTOMETRY

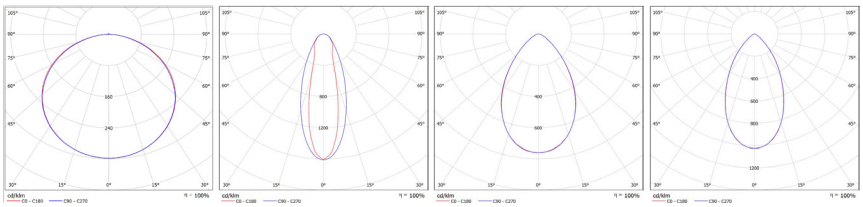

W/O LENS | TLS01NI-D12-2550 | TLS01NI-D12-90 | TLS01NI-D15-60

All Rights Reserved for TLS Technology Systems | Subject to Change with out Prior Notice.
Akçaburgaz Mahallesi 3080. Sokak No:5 Esenyurt / İstanbul | www. tlsteknoloji.com | TEL: +90 444 27 33

TECHNICAL DATA

Beam Angle	120°
Ambient temperature range	-25° ~ +55°C
Tc max	100°C
Max. DC forward current	1400mA
Typical voltage of LED Module at max current	21,5 V
Insulation test voltage	2kV
ESD classification	Class 1
Risk group (EN 62471:2008)	2
Type of protection	IP00

ORDERING INFORMATIONS

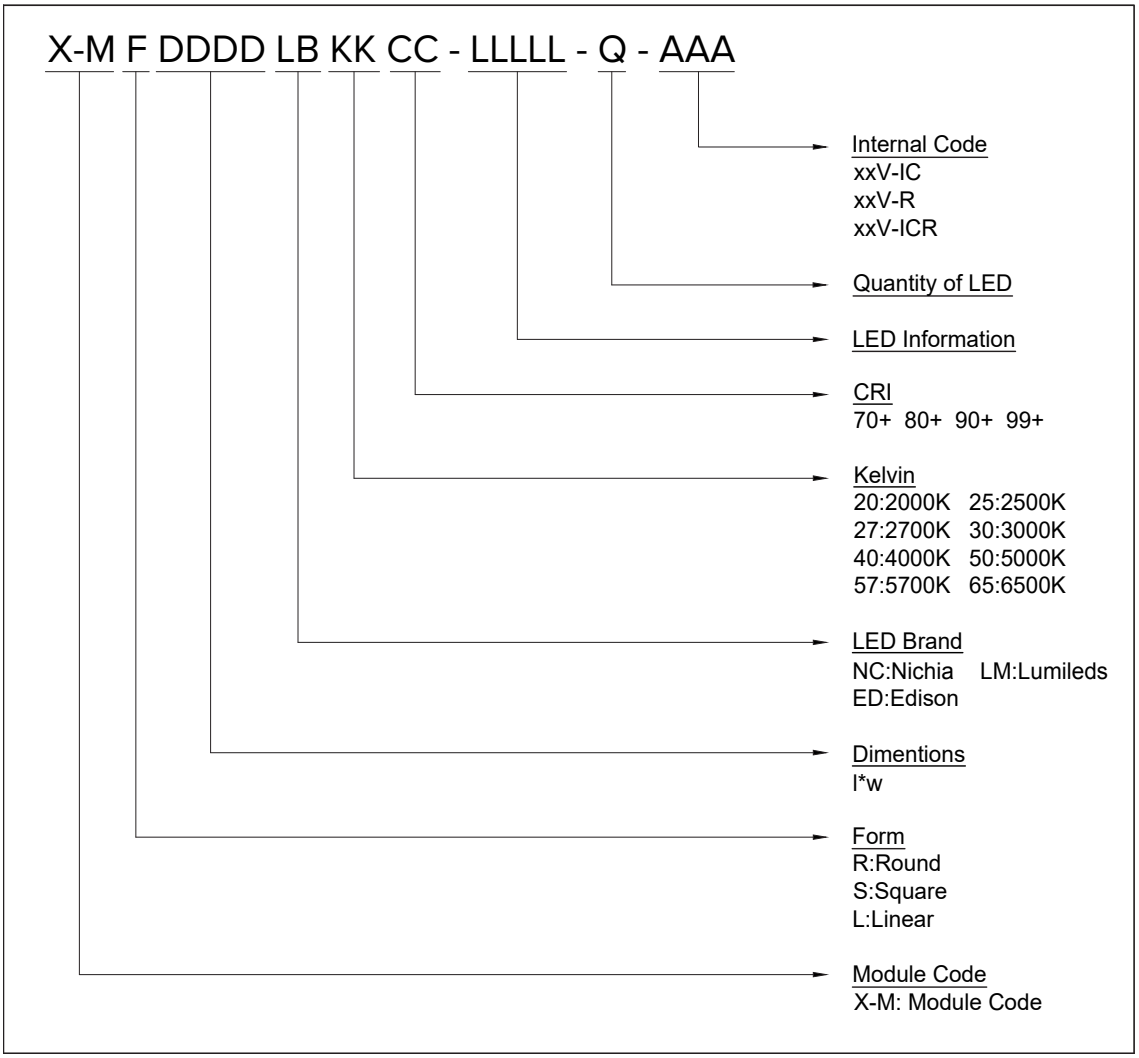

All Rights Reserved for TLS Technology Systems | Subject to Change with out Prior Notice.
Akçaburgaz Mahallesi 3080. Sokak No:5 Esenyurt / İstanbul | www. tlsteknoloji.com | TEL: +90 444 27 33

DRIVING CURRENT VS LUMEN OUTPUT SPECIFICATION

Common Characteristic [@Tj : 85°C] ;				
Module Code	X-MR0035NCxx-NVSW319B-7			
PCB Material	ALU		Electrical Connection	
Operating Temperature (°C)	-40 ~ +100		Parallel	1
Storage Temperature (°C)	-40 ~ +55		Series	7
Thermal Conductivity (W/m-K)	1>		LED Quantity	7
LED		NVSW319B_R8000		
Correlated Color Temperature (CCT)		4000K		
Color Rendering Index (CRI)		80+		
Module Operating Voltage (V)	19,04	19,88	20,93	
Module Operating Current (mA)	350	700	1400	
Branch Operating Current (mA)	350	700	1400	
Module Power (W)	6,66	13,92	29,30	
Module Light Output (lm)	1.100	2.101	3868	
Module Efficiency (lm/W)	165	151	132	
LED		NVSW219F-V1_R8000		
Correlated Color Temperature (CCT)		4000K		
Color Rendering Index (CRI)		80+		
Module Operating Voltage (V)	19,53	20,3	21,42	
Module Operating Current (mA)	350	700	1400	
Branch Operating Current (mA)	350	700	1400	
Module Power (W)	6,84	14,21	29,99	
Module Light Output (lm)	1.094	2.075	3778	
Module Efficiency (lm/W)	160	146	126	
LED		NVSW219F_R70		
Correlated Color Temperature (CCT)		4000K		
Color Rendering Index (CRI)		70+		
Module Operating Voltage (V)	19,53	20,3	21,42	
Module Operating Current (mA)	350	700	1400	
Branch Operating Current (mA)	350	700	1400	
Module Power (W)	6,84	14,21	29,99	
Module Light Output (lm)	1.230	2.302	4138	
Module Efficiency (lm/W)	180	162	138	

The table below shows how to Module Light Output changes depending on CCT (°K)

Lumen Output Multiplier					
LED	2700°K (CRI 80)	3000°K (CRI 80)	4000°K (CRI 80)	5000°K (CRI 80)	6500°K (CRI 80)
NVSW319B_R8000	0,92	0,94	1,00	1,01	0,98
NVSW219F-V1_R8000	0,88	0,92	0,96	0,97	0,94

Lumen Output Multiplier					
LED	2700°K (CRI 70)	3000°K (CRI 70)	4000°K (CRI 70)	5000°K (CRI 70)	6500°K (CRI 70)
NVSW219F_R70	0,93	0,95	1,00	1,01	X

Relative luminous intensity versus CCT (°K)

All Rights Reserved for TLS Technology Systems | Subject to Change with out Prior Notice.

X-MR0035NCxx-NVSW319B-7 MECHANICAL DRAWINGS

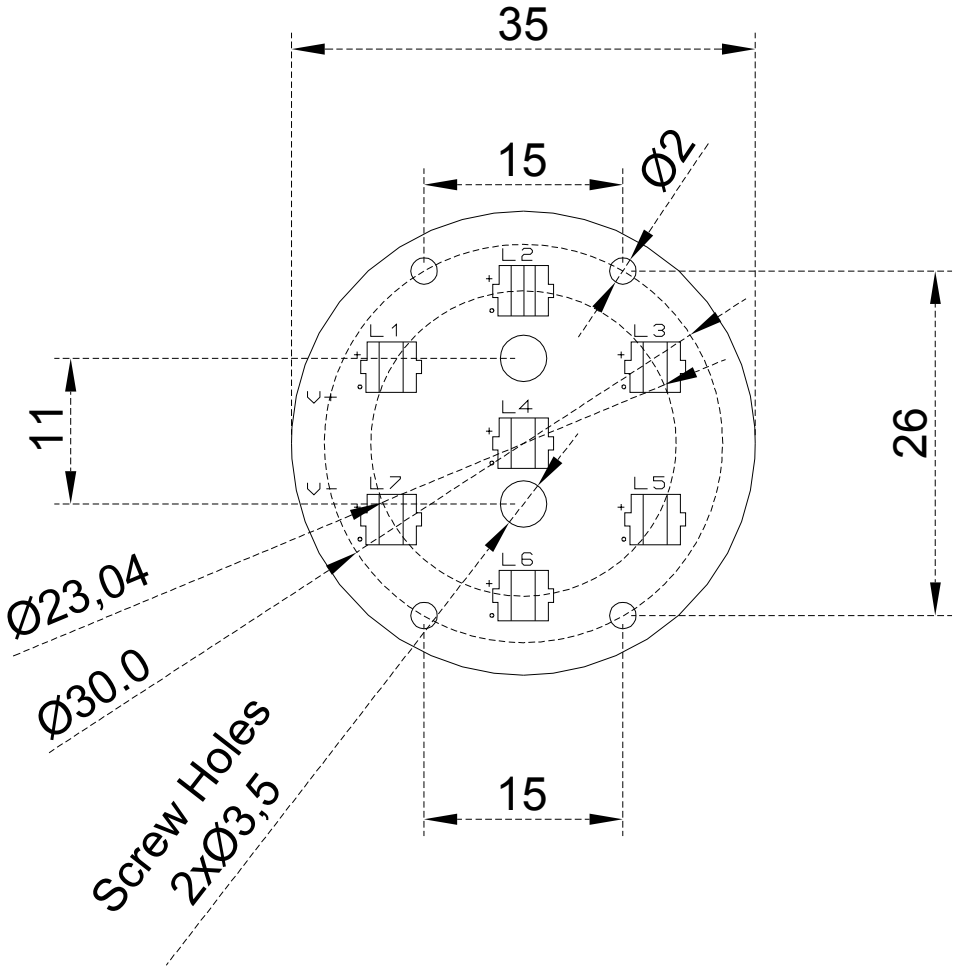

SERBEST ÖLÇÜ TOLERANSLARI -DIN 2768-1 / General Tolerances for linear and angular dimensions (DIN ISO 2768-1)

0.5 up to 3mm	over 3 up to 6mm	over 6 up to 30mm	over 30 up to 120mm	over 120 up to 400mm	over 400 up to 1000mm
± 0.1	± 0.1	± 0.2	± 0.3	± 0.5	± 0.8

Stock code No		MALZEME (MATERIAL) XXX	AGIRLIK (WEIGHT) XXX
Revision	00		
Date	10.12.2019	TLS-001-10R0035NC-7	OLÇEK / SCALE A4
Sheet			
Drawn By	Kaan ALTINTEN		
Checked By	Ibrahim OKMEN		
Approved By	Mesut CINAR		

TD Lighting Solutions

TLS Teknoloji Sanayi ve Dis Ticaret A.S

This drawing is our property. It cant be reproduced or communicated without our written agreement.

All Rights Reserved for TLS Technology Systems | Subject to Change with out Prior Notice.

CCT AND BINNING INFORMATION

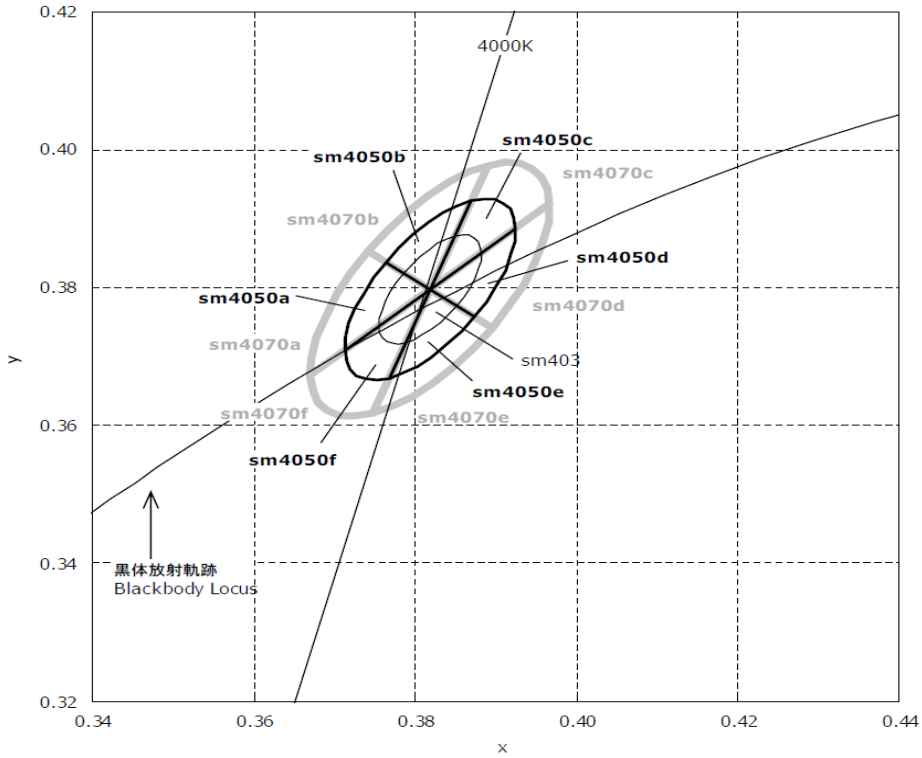

All Rights Reserved for TLS Technology Systems | Subject to Change with out Prior Notice.

LIFE TIME

MODEL NUMBER: NVSW319B

Test Summary:

Data Set	Case Temperature [°C]	Ambient Temperature [°C]	Drive Current [mA]	Lumen Maintenance at 10K hours [%]	Chromaticity Shift (Δu'v') at 10K hours	TM-21 Projection L70(10K) [hours]	TM-21 Projection L80(10K) [hours]	TM-21 Projection L90(10K) [hours]
1	55	> 50	1050	98.5	0.0006	> 60000	> 60000	> 60000
2	55	> 50	1200	98.5	0.0007	> 60000	> 60000	> 60000
3	55	> 50	1500	98.2	0.0008	> 60000	> 60000	55500
4	85	> 80	1050	98.2	0.0008	> 60000	> 60000	> 60000
5	85	> 80	1200	98.0	0.0010	> 60000	> 60000	> 60000
6	85	> 80	1500	97.4	0.0014	> 60000	> 60000	45800
7	105	> 100	1050	97.6	0.0014	> 60000	> 60000	56600
8	105	> 100	1200	97.2	0.0016	> 60000	> 60000	44600
9	105	> 100	1500	88.2	0.0022	22800	15900	9870

All Rights Reserved for TLS Technology Systems | Subject to Change with out Prior Notice.

LEGAL NOTICE

Product information provided by TLS Teknoloji Sistemleri San ve Dış Tic AŞ ("TLS") in this document is believed to be correct and accurate. TLS reserves the right to change/correct the specifications and other data or information relating to products without notice but TLS accepts no liability for errors that may appear in this document, howsoever occurring, or liability arising from the use or application of any information or data provided herein. Neither the supply of such information, nor the purchase or use of products conveys any licence or permission under patent, copyright, trademark or other intellectual property right of TLS or third parties.

Products sold by TLS are subject to its standard Terms and Conditions of Sale that are available on request. No warranty is given that products do not infringe the intellectual property rights of third parties, and furthermore, the use of products in certain ways or in combination with TLS, or non-TLS furnished equipments/components may infringe intellectual property rights of TLS.

The purpose of this document is to provide information only and it may not be used, applied or reproduced (in whole or in part) for any purpose nor be taken as a representation relating to the products in question. No warranty or guarantee express or implied is made concerning the capability, performance or suitability of any product, and information concerning possible applications or methods of use is provided for guidance only and not as a recommendation. The user is solely responsible for determining the performance and suitability of the product in any application and checking that any specification or data it seeks to rely on has not been superseded.

Products are intended for normal commercial applications. For applications requiring unusual environmental requirements, extended temperature range, or high reliability capability (e.g. military, or medical applications), special processing/testing/conditions of sale may be available on application to TLS.

CONTACT

TLS Teknoloji Sistemleri San ve Dış Tic AŞ
Akçaburgaz Mahallesi 3080. Sokak No:5 Esenyurt / İstanbul / TURKEY

info@tlsteknoloji.com
+90 444 27 33

All Rights Reserved for TLS Technology Systems | Subject to Change with out Prior Notice.